TERAL (Formerly known as Fuji Vacuum Pump)

Vacuum Pump - Japan (Single Phase)

Stock Code:
881114023A VFC208PF-S
881114020A VFC308PF-S
881114021A VFC408PF-S
881114022A VFC508PF-S

- Low noise and vibration
- Dust-proof shaft seal
- High reliability
- Space-efficient design
- Versatility
- Stable airflow
- High-pressure airflow

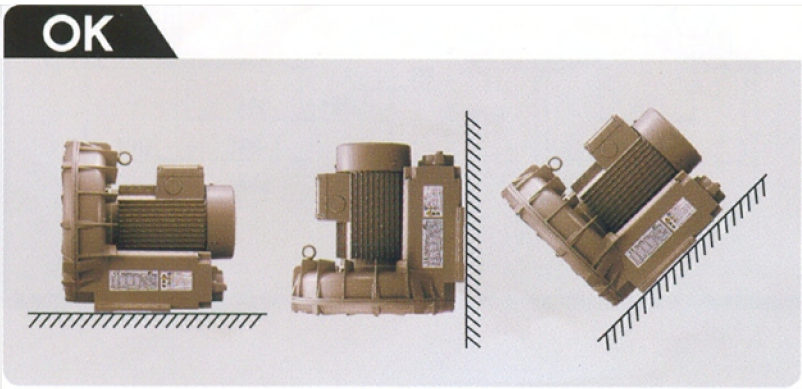

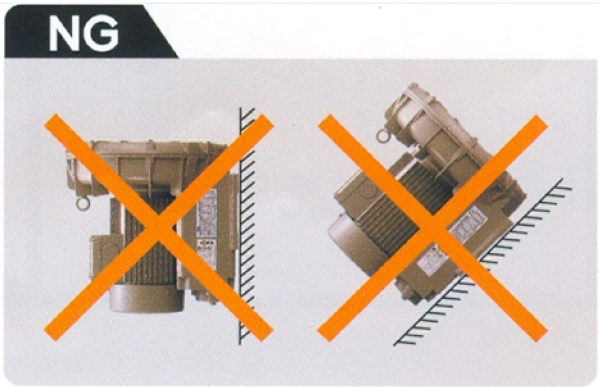

Model	Voltage 50Hz, 1PH	Max. Output	Max. Current	Max. Static Pressure	Max. discharge air flow	Noise value	Inlet & Outlet diameters	Approx. mass
	[V]	[kW]	[A]	[kPa]	[m^3/min]	[dB(A)]	(mm)	[kg]
VFC208PF-S	240	0.17	1.4	6.67	0.90	63	32	11.0
VFC308PF-S		0.28	1.8	9.32	1.28	65	38	12.5
VFC408PF-S		0.55	3.1	10.4	2.00	74	50	21.0
VFC508PF-S		1.30	5.4	14.7	3.40	80	50	33.0

***Related catalogue for 3 Phase, please refer to ESM282-ii.
***Product's specification subject to change without further notice.
***Actual product may slightly differ from pictures shown.

TERAL (Formerly known as Fuji Vacuum Pump)

Vacuum Pump - Japan (Three Phase)

Stock Code:

881114035A	VFZ101AF-S
881114034	VFZ201AF-S
881114028	VFZ301AF-S
881114025A	VFZ401AF-S
881114026A	VFZ501AF-S
881114027A	VFZ601AF-S
881114006A	VFC708A-S
881114007A	VFC808A-S
881114040	VFZ901A-4Z

◎RoHS directive are supported in the standard configuration.

◎The international protection class is IP54 (motor section).

◎CE marking is provided.

Image of appearance

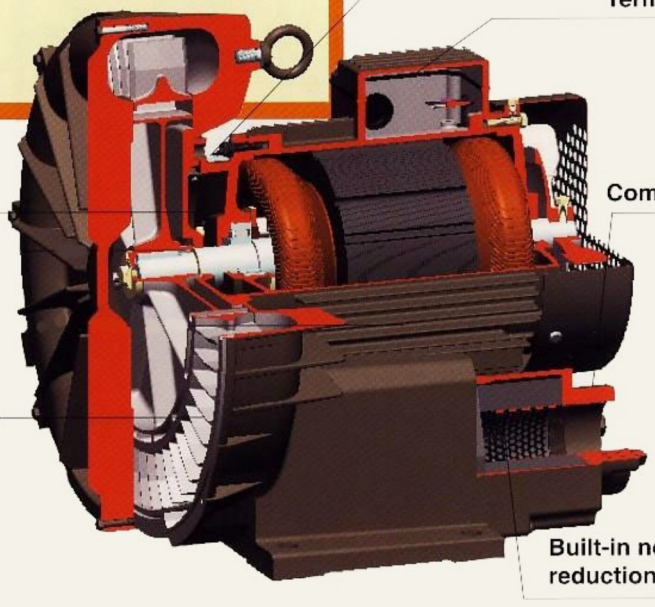

Model	Voltage 50Hz, 3PH	Max. Output	Max. Current	Max. Static Pressure	Max. discharge air flow	Noise value	Inlet & Outlet diameters	Approx. mass
	[V]	[kW]	[A]	[kPa]	[m^3/min]	[dB(A)]	(mm)	[kg]
VFZ101AF-S	415	0.09	0.52	5.15	0.58	52.5	Rp1	7.5
VFZ201AF-S		0.17	1.40	6.67	0.90	57.5	Rp1	9.0
VFZ301AF-S		0.28	1.80	9.32	1.28	58.0	Rp 1-1/4	11.0
VFZ401AF-S		0.55	3.10	10.40	2.00	65.5	Rp 1-1/2	19.0
VFZ501AF-S		1.30	5.40	14.70	3.40	70.5	Rp 1-1/2	27.5
VFZ601AF-S		2.30	11.50	21.10	4.20	70.0	Rp2	43.0
VFC708A-S		3.30	15-15.6	21.60	6.20	75.0	Rp2	84.0
VFC808A-S		5.50	20-21	25.50	8.70	78.0	Rp 2-1/2	132.0
VFZ901A-4Z		7.00	31.00	25.50	13.00	79.5	Rp3	107.0

***Related catalogue for 1 Phase, please refer to ESM282-i.
***Product's specification subject to change without further notice.
***Actual product may slightly differ from pictures shown.

Externals dimensional drawing & characteristic

VFC208PF-S

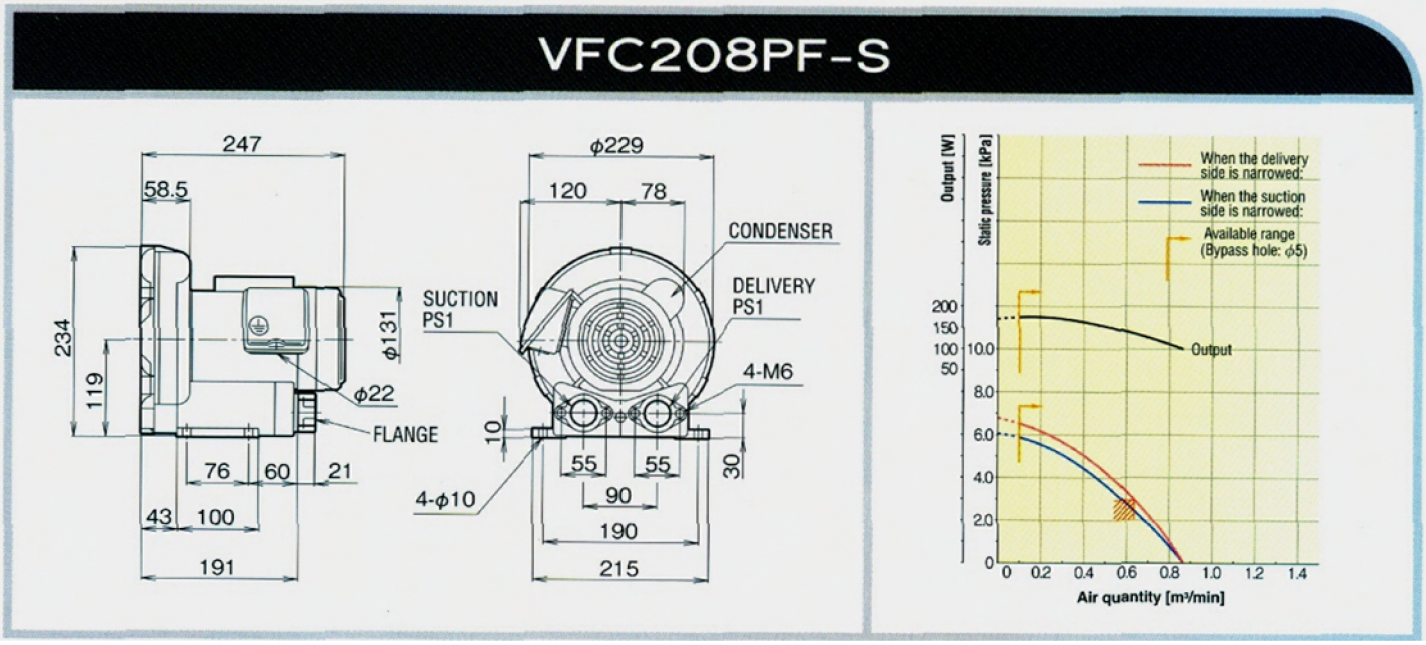

VFC308PF-S

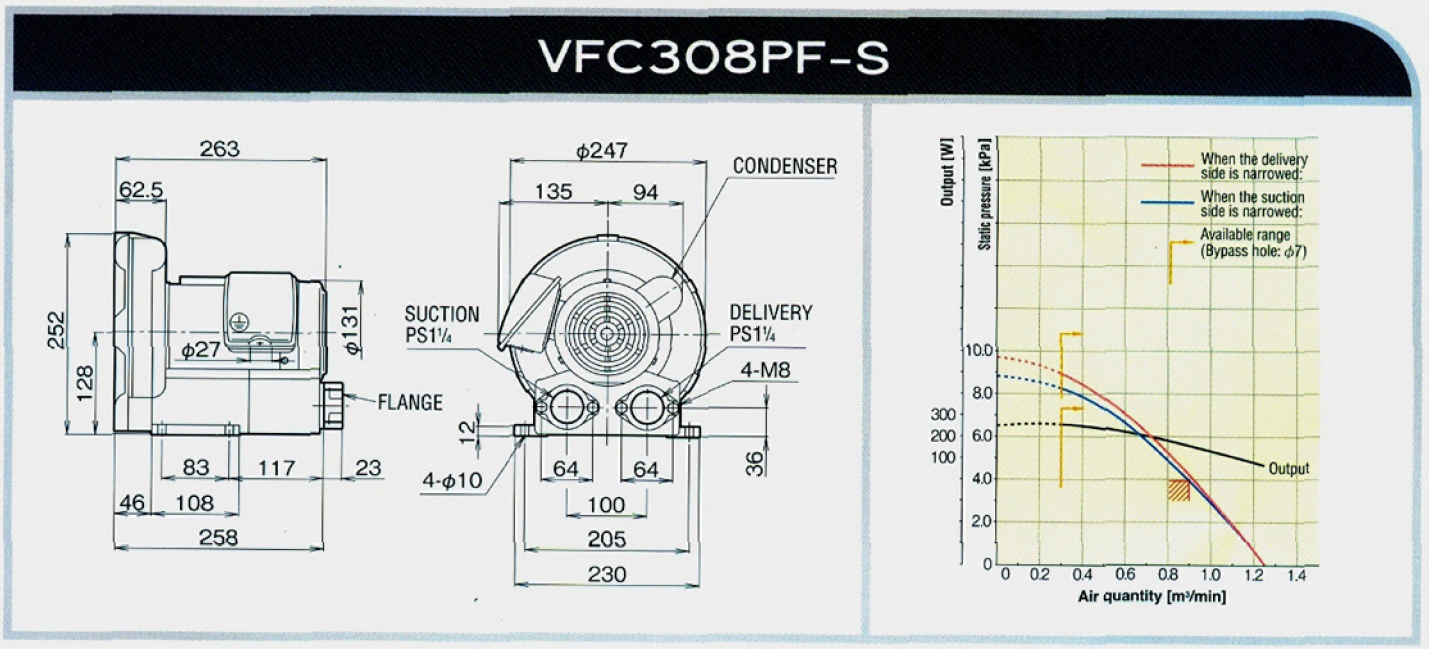

***Product's specification subject to change without further notice.
***Actual product may slightly differ from pictures shown.

Externals dimensional drawing & characteristic

VFC408PF-S

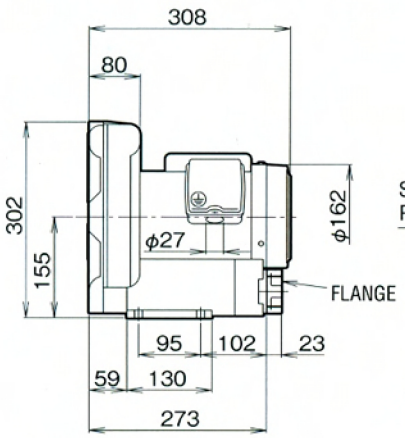

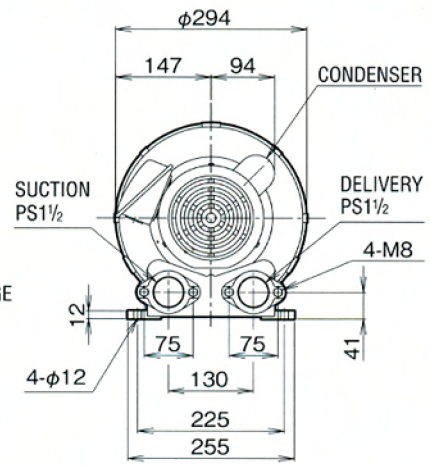

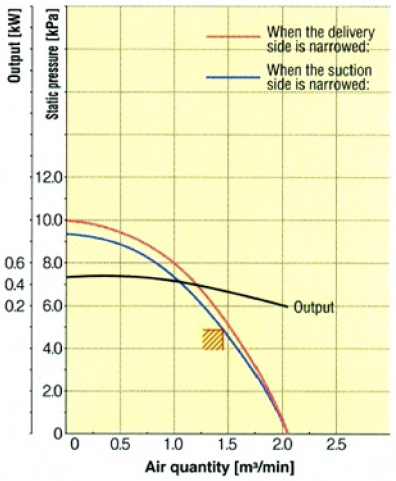

VFC508PF-S

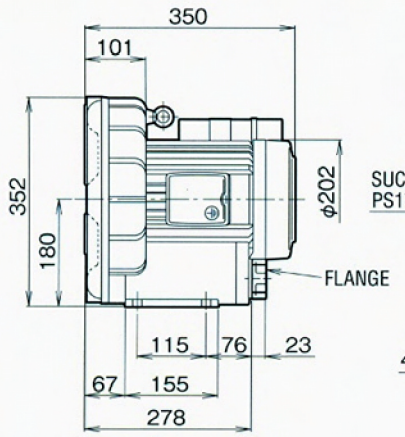

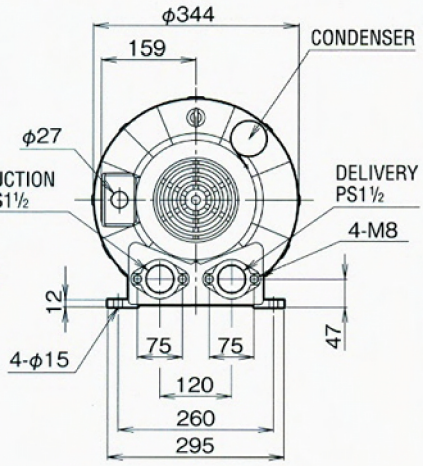

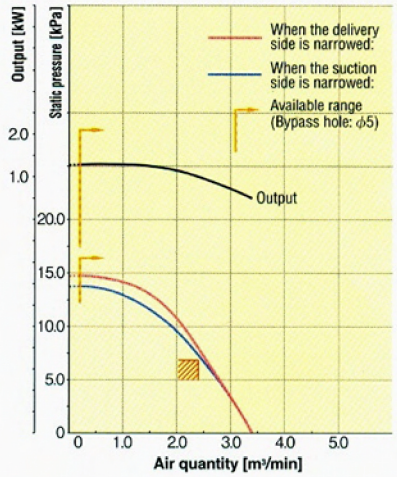

***Product's specification subject to change without further notice.
***Actual product may slightly differ from pictures shown.

Externals dimensional drawing & characteristic

VFZ101AF-S

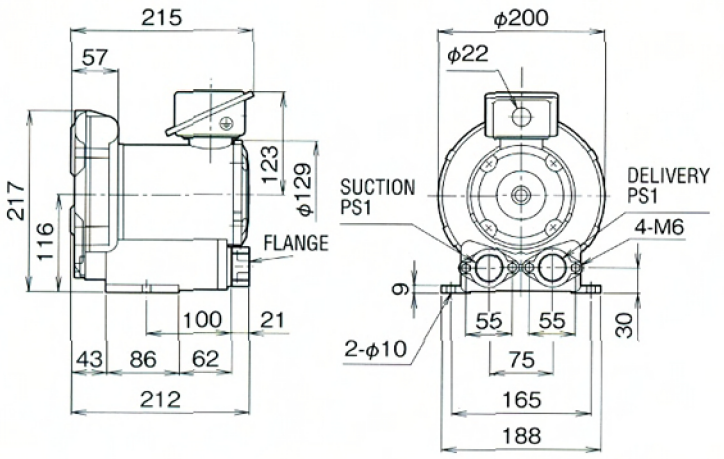

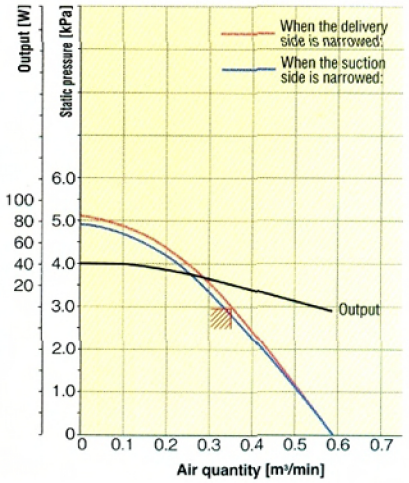

VFZ201AF-S

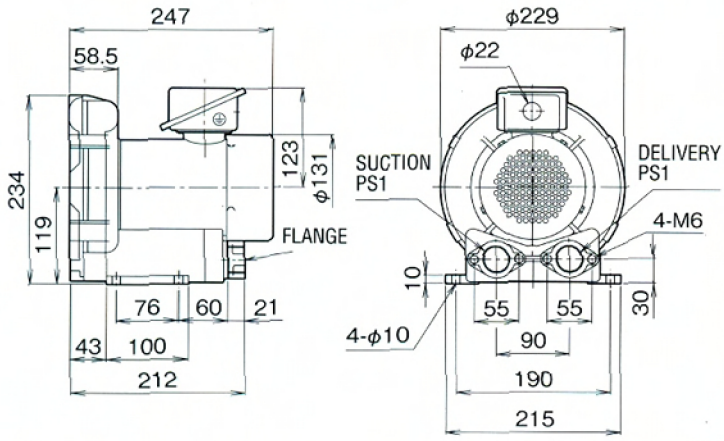

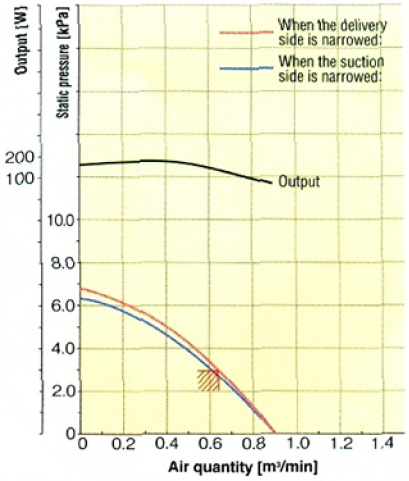

***Product's specification subject to change without further notice.
***Actual product may slightly differ from pictures shown.

Externals dimensional drawing & characteristic

VFZ301AF-S

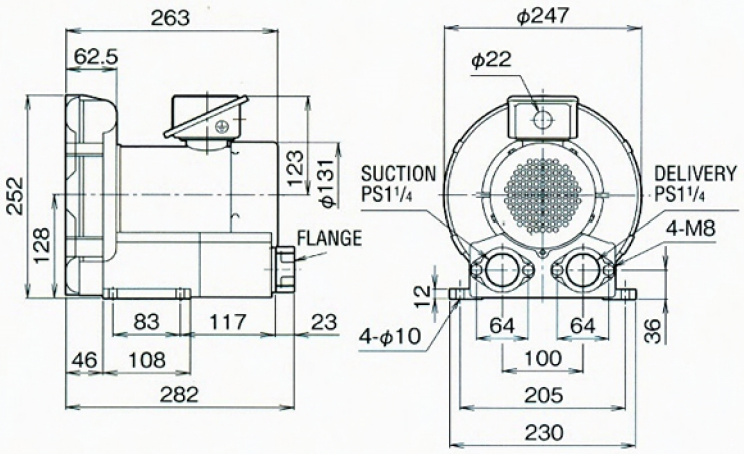

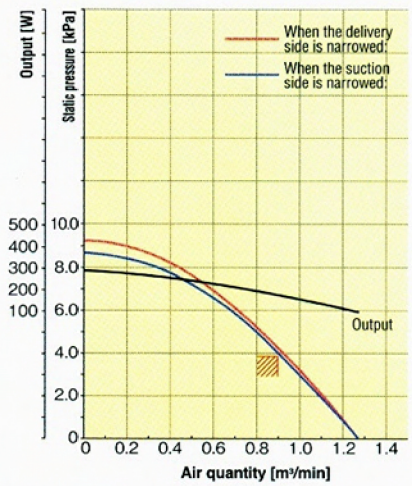

VFZ401AF-S

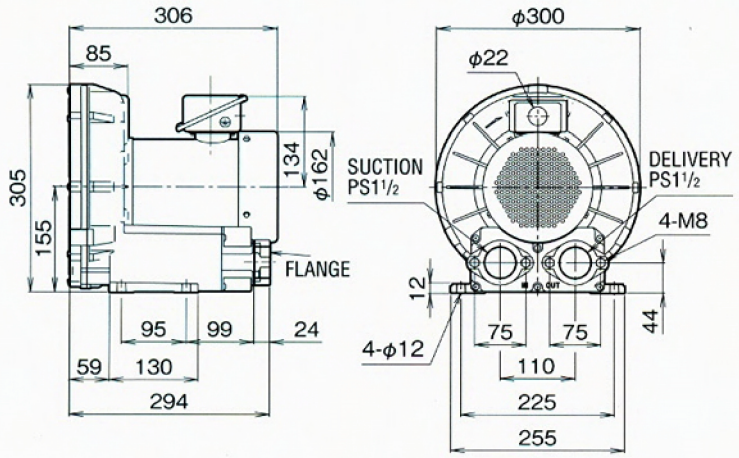

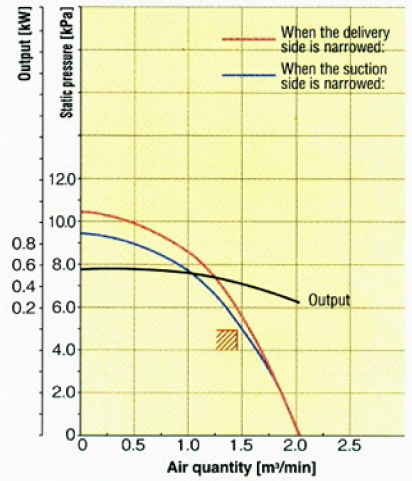

***Product's specification subject to change without further notice.
***Actual product may slightly differ from pictures shown.

Externals dimensional drawing & characteristic

VFZ501AF-S

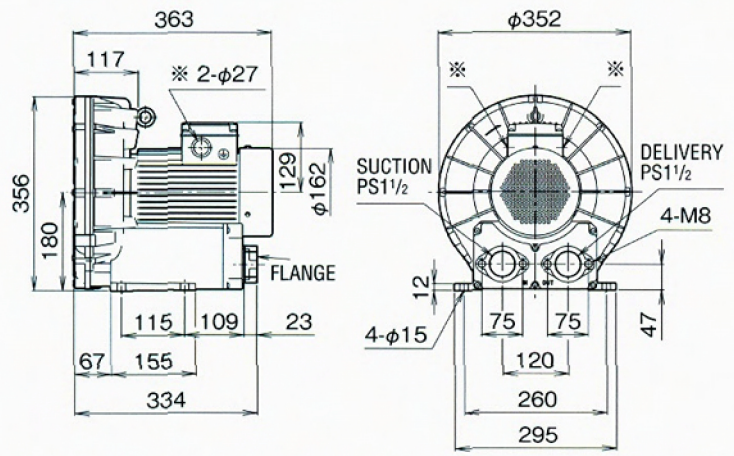

* Note) When using the product for suction totally-enclosed shutoff operation, be sure to remove the emblem.

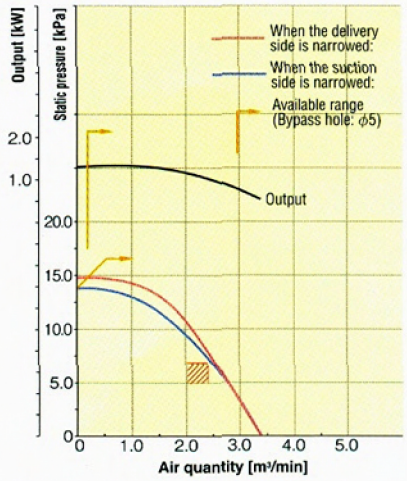

VFZ601AF-S

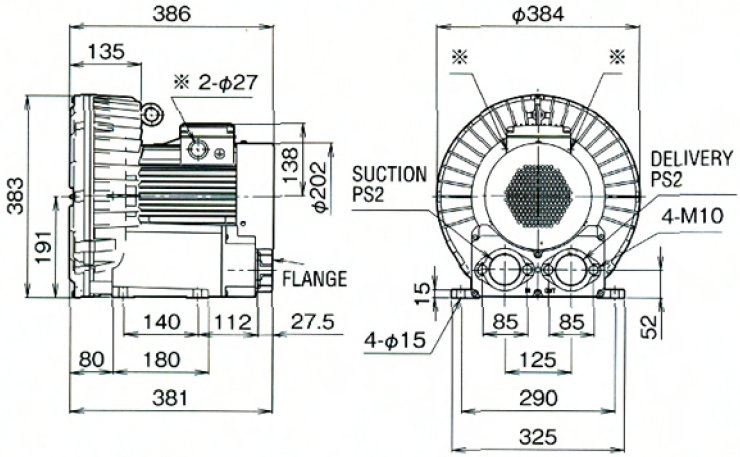

* Note) When using the product for suction totally-enclosed shutoff operation, be sure to remove the emblem.

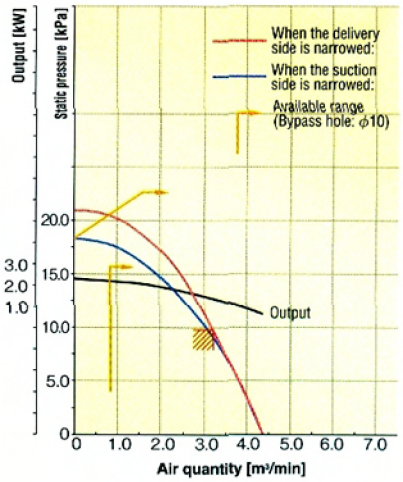

***Product's specification subject to change without further notice.
***Actual product may slightly differ from pictures shown.

Externals dimensional drawing & characteristic

VFC708A-S

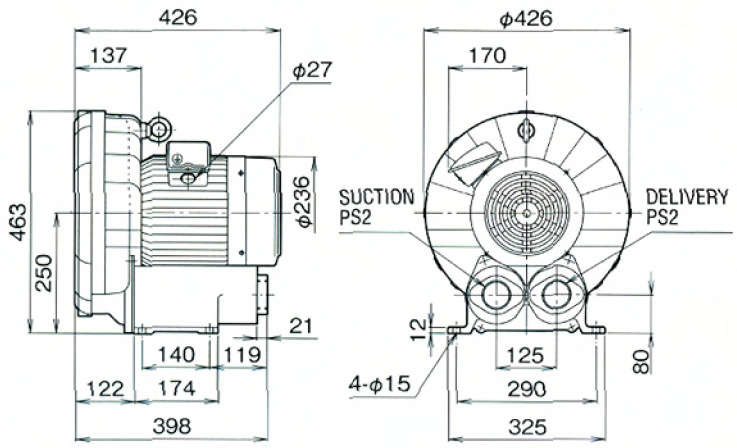

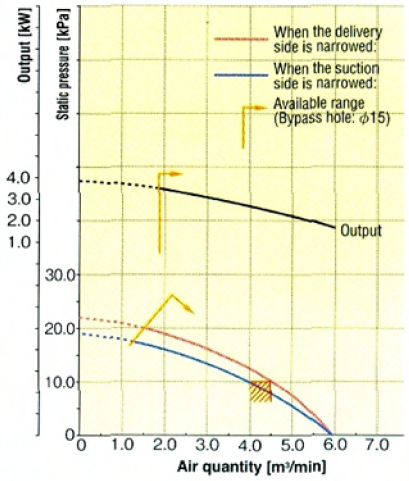

VFC808A-S

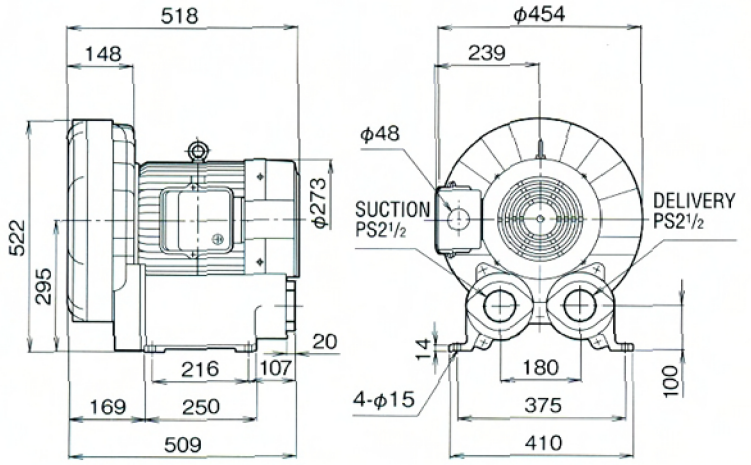

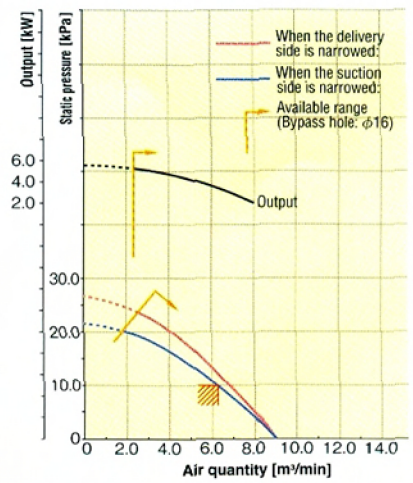

***Product's specification subject to change without further notice.
***Actual product may slightly differ from pictures shown.

Externals dimensional drawing & characteristic

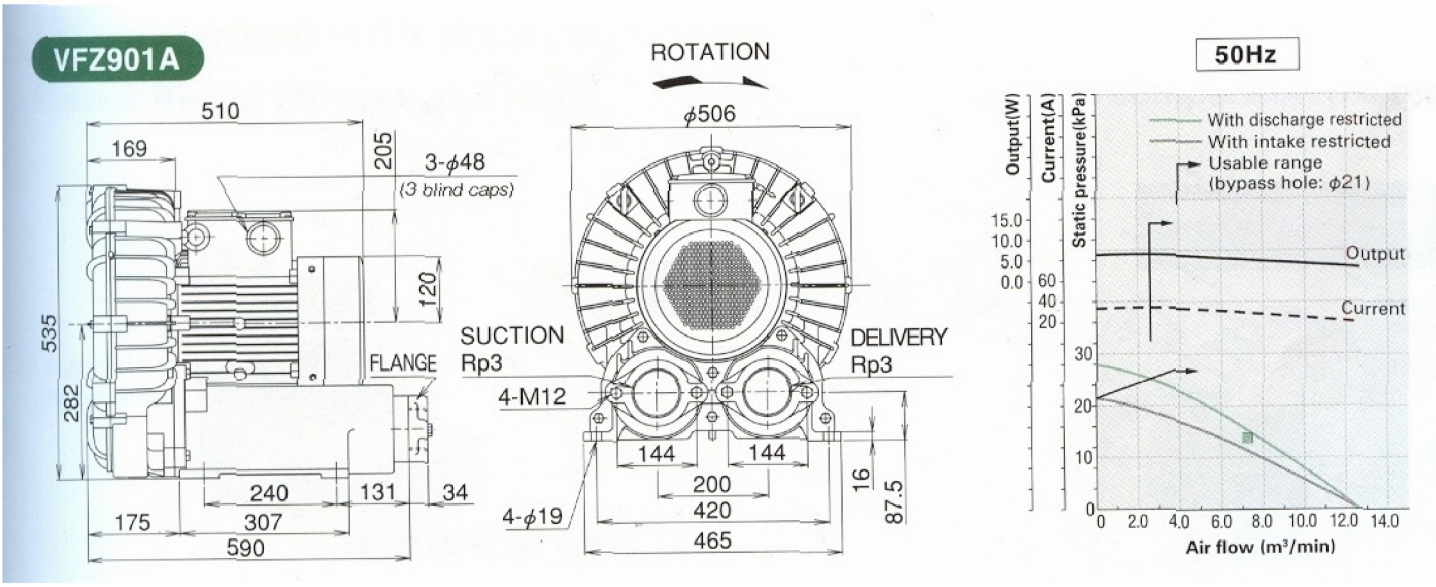

To ensure a margin for safety, values on the nameplates are discharge characteristics.
Airflow volume and static pressure are the QN and PN optimum use characteristic points, and output and current are the LM and IR usable discharge characteristic points (see diagram below).

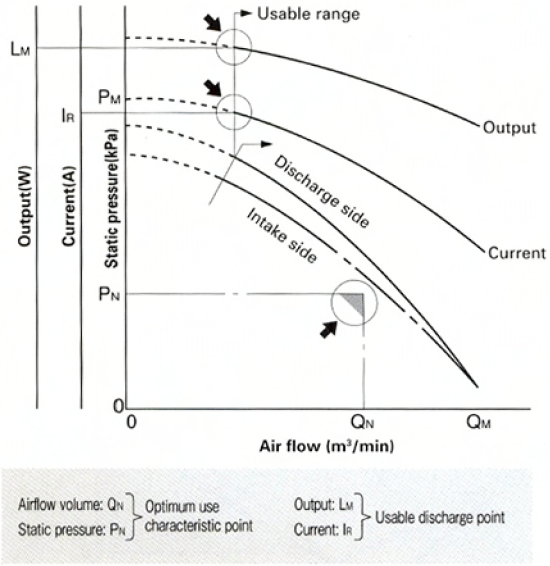

Supplement

●Maximum values

Maximum discharge static pressure (PM) occurs at an airflow volume of 0.
Maximum air volume (QM) occurs at a static pressure of 0.

●Intake characteristics

Since air density with intake restricted is low, characteristic values are slightly lower relative to the case with discharge side restricted.

●Thermal settings

When using at both 50 Hz and 60 Hz, adjust to the 60Hz current value on the nameplate. If using solely at 50 Hz or 60 Hz, adjust to the relevant current value on the nameplate.

***Product's specification subject to change without further notice.
***Actual product may slightly differ from pictures shown.